VESTEL WHITE GOODS	BUILT IN-COMBI 2761-MECHANIC	CUSTOMER SUPPORT
	INTERIOR PARTS-1	

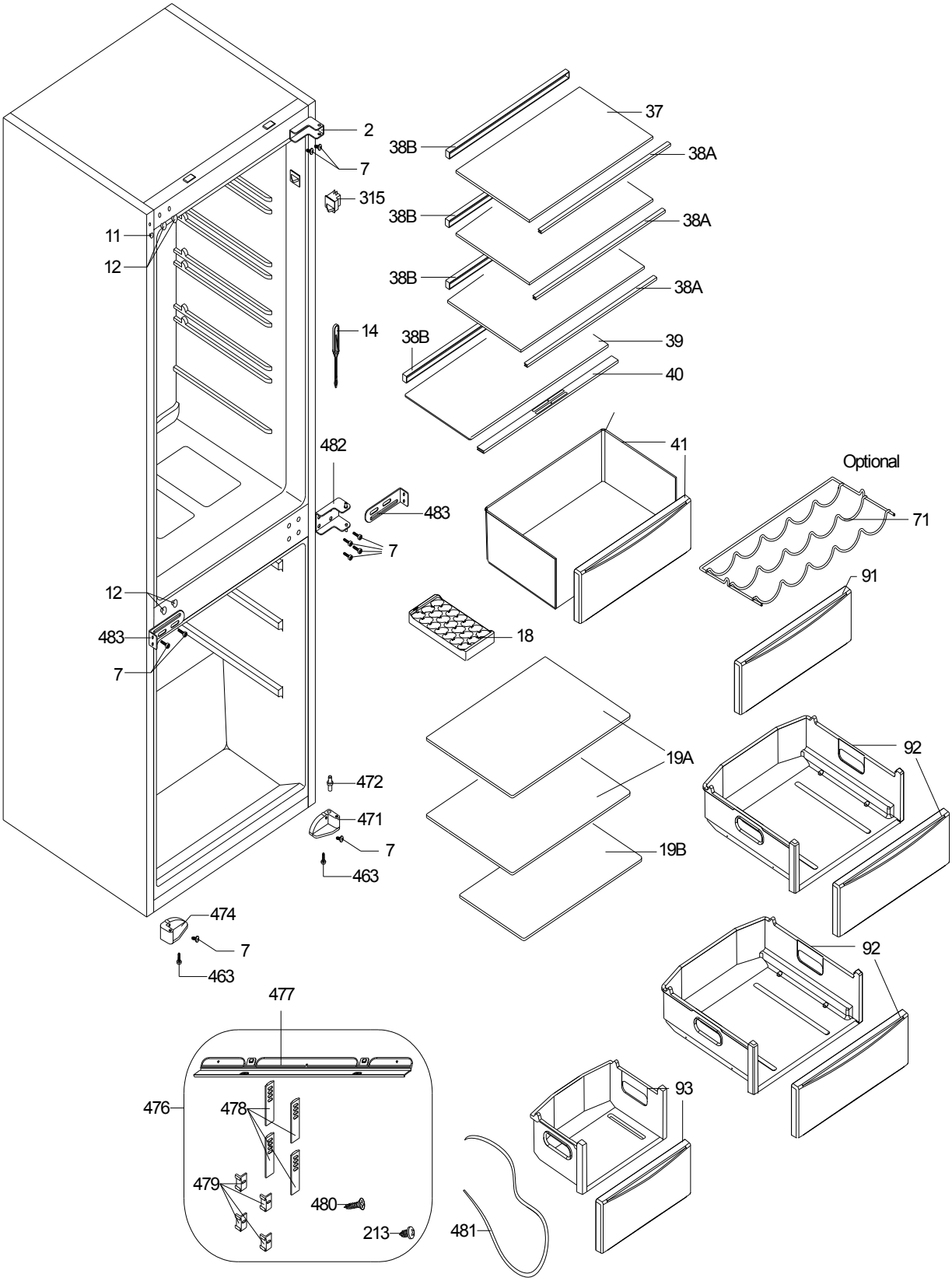

JUNE 2017

VESTEL WHITE GOODS	BUILT IN-COMBI 2761-MECHANIC	CUSTOMER SUPPORT
	INTERIOR PARTS-2	

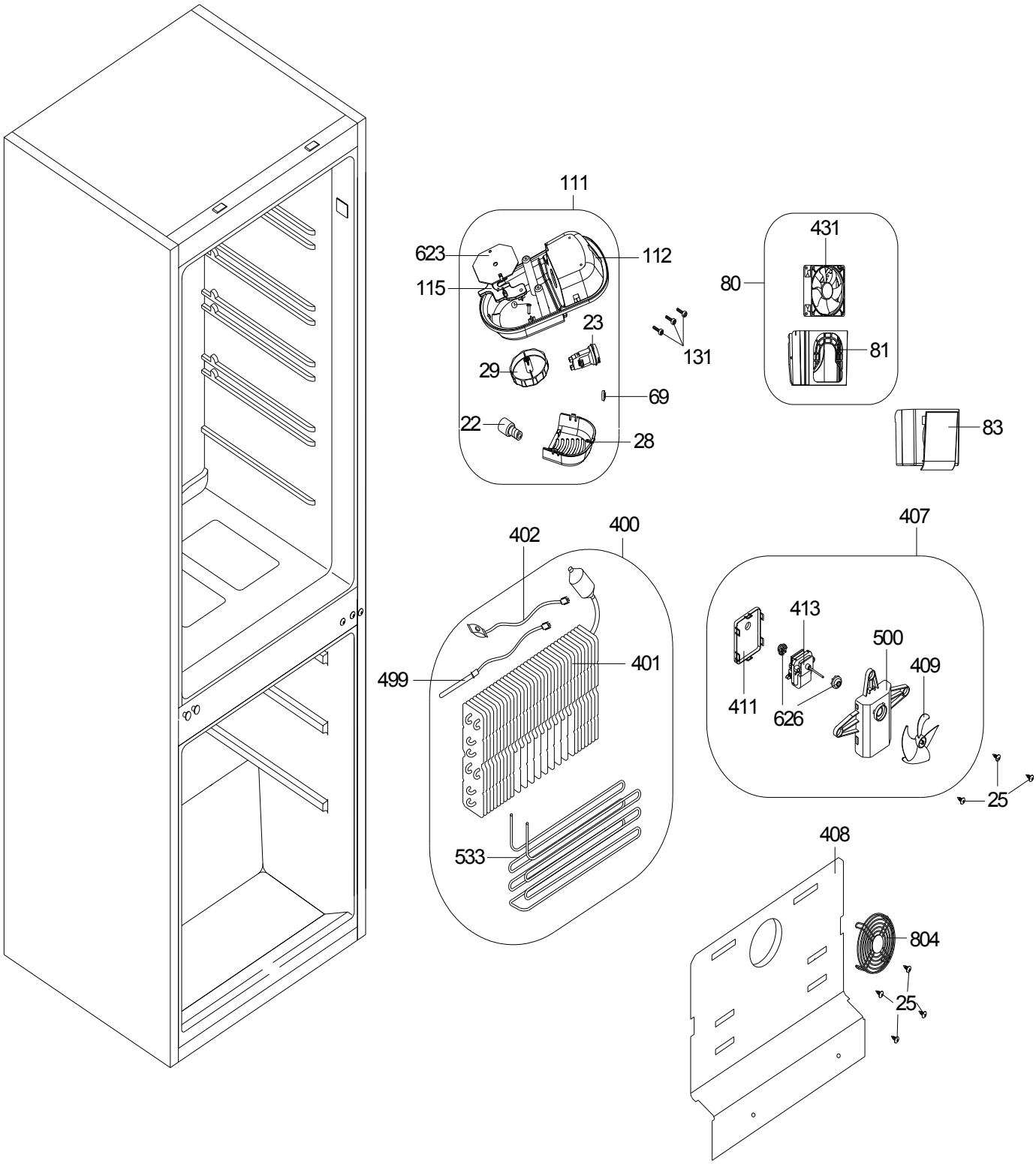

JUNE 2017

VESTEL WHITE GOODS	BUILT IN-COMBI 2761-MECHANIC	CUSTOMER SUPPORT
	DOOR ASSY. PARTS	

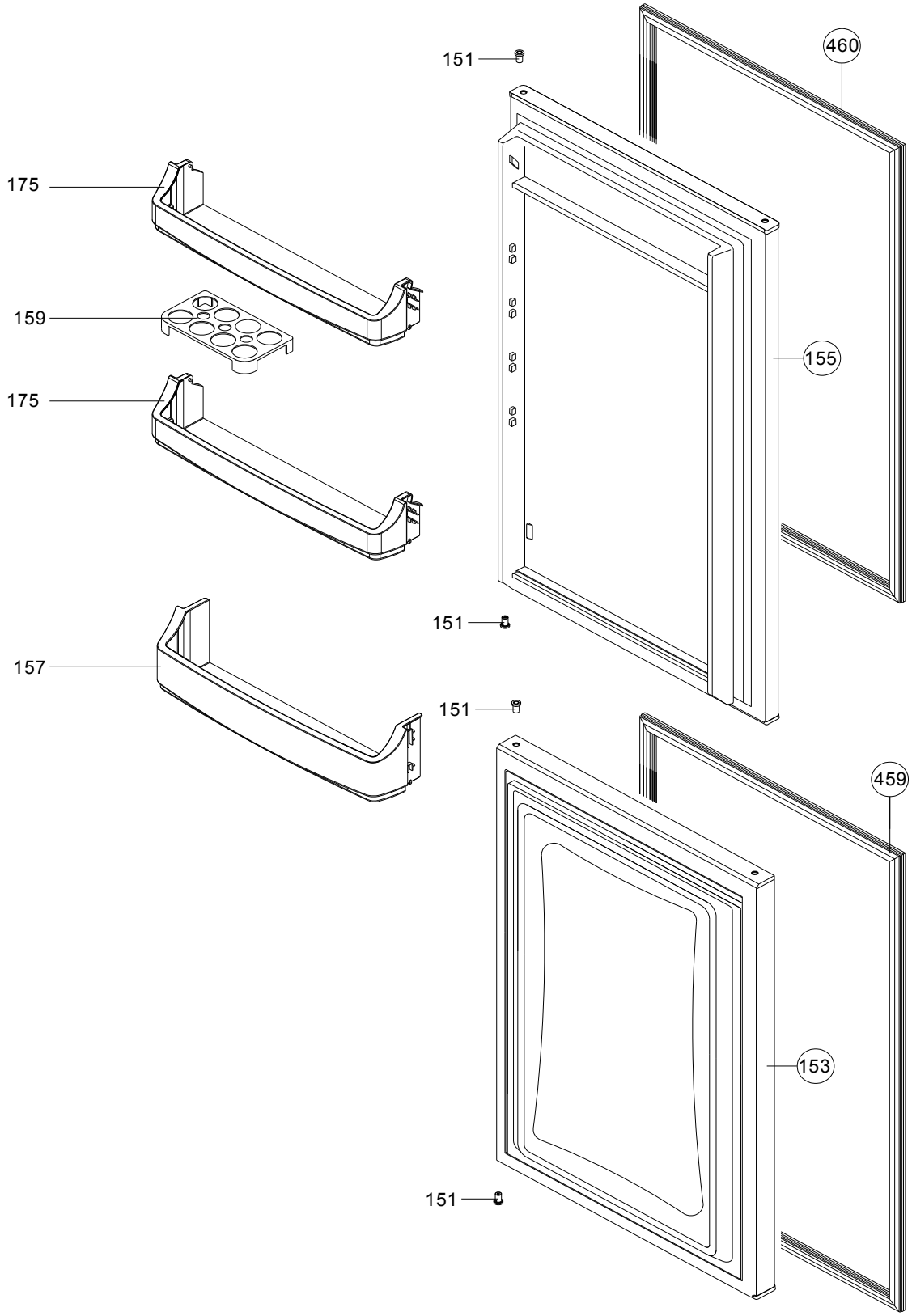

JUNE 2017

VESTEL WHITE GOODS	BUILT IN-COMBI 2761-MECHANIC	CUSTOMER SUPPORT
	UNIT PARTS	

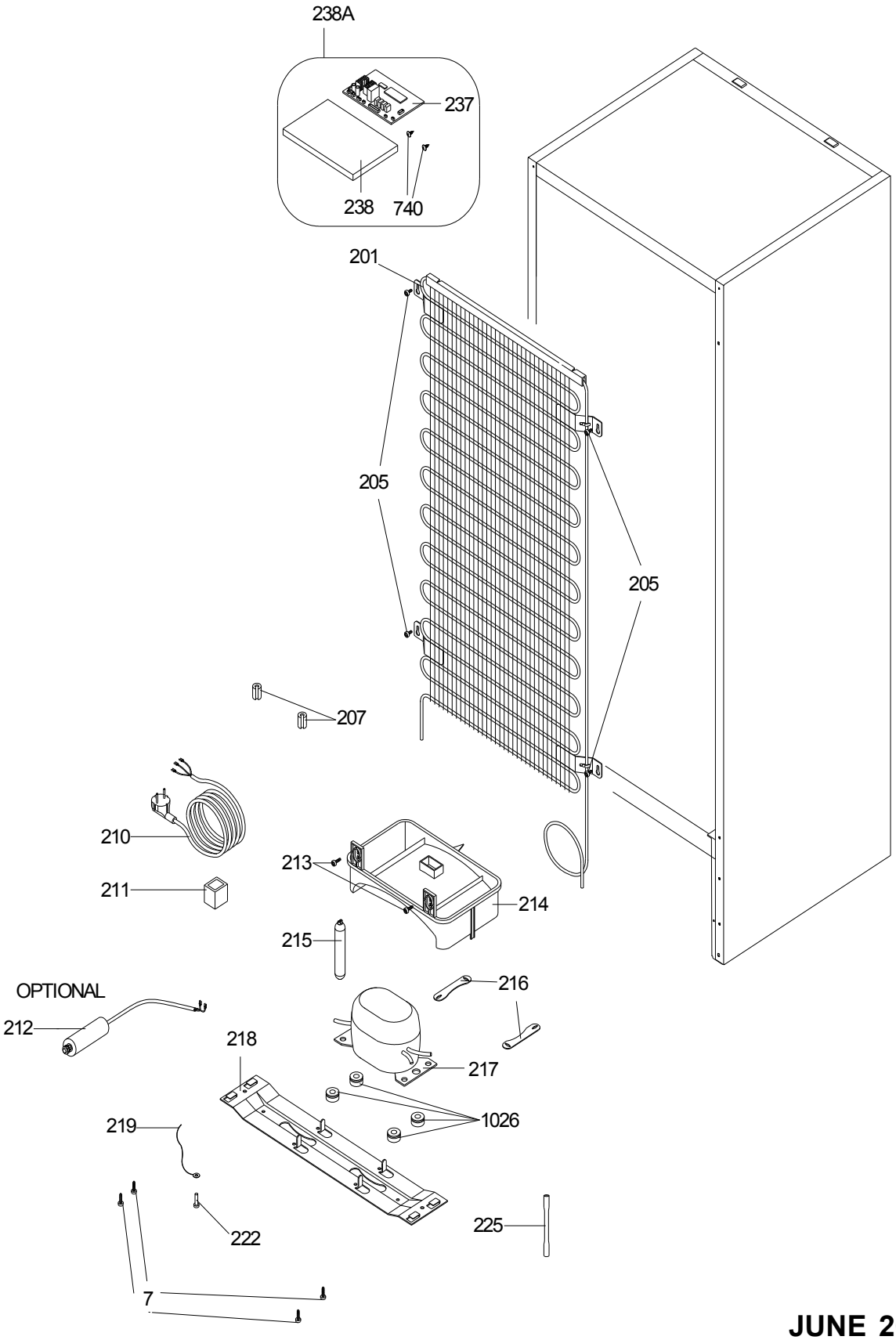

JUNE 2017