由 Autodesk 教育版产品制作

DOC.NO:

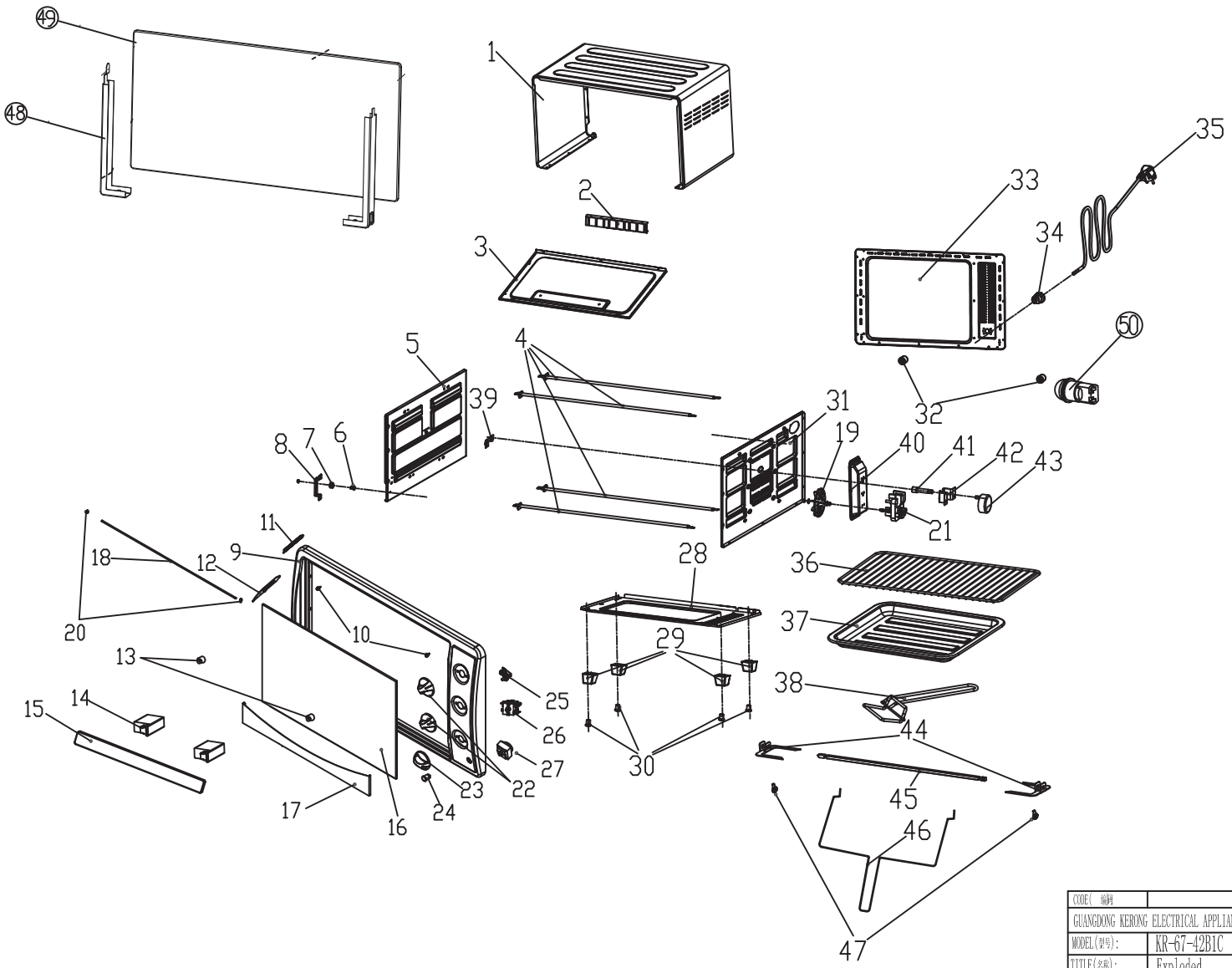

50		Lamp		
49		Inner door glass		
48		Door side stente	2	SPCC
47	蝶型螺钉	Wing Screw	2	Q235
46	托叉	Handle of roasting fork	1	Q235
45	方形转轴	Rotating Shaft	1	Q235
44	旋转轴叉	Rotisserie Fork	2	SPCC
43	同步电机	Synchronous Motor	1	250V/4W
42	电机支架	Motor stents	1	SGCC
41	联轴器	Linkage bracket	1	Q235
40	风机壳	Convection Cover	1	SGCC
39	转轴支架	Axis stents	1	SPCC/镀镍
38	抓手	Food Tray Handle	1	Q235/镀镍
37	烤盘	Food Tray	1	SPCC/搪瓷
36	烤网	Mesh plate	1	Q235
35	电源线	Power cord	1	H05RR 3G 0.75
34	线扣	Bushing Cord	1	PA
33	后板	Rear Enclosure	1	SGCC
32	后背脚	Rear Spacer	2	PA
31	右侧板	Right Side Plate	1	SGCC
30	炉脚垫	Rubber Foot	4	rubber/橡胶
29	炉脚	Support foot	4	PA
28	底板	Bottom Enclosure	1	SGCC
27	定时器	Timer	1	250V/16A
26	开关	Switch	1	250V/16A
25	温控器	Thermostat	1	250V/10A
24	指示灯	Indicator light	1	PC
23	定器旋钮	Time knob	1	PA
22	开关旋钮	Switch knob	2	PA
21	罩极电机	Fan Motor	1	250V/12W
20	门轴套	Door axis sheath	2	CU
19	风叶	Convection Fan	1	SGCC
18	门轴	Door hinges	1	Q235
17	下门夹	Lower Door Clamp	1	SPCC
16	玻璃门	Glass door	1	glass
15	拉手管	Handle Knob circle	1	PA
14	拉手座	Door handle	1	PA
13	拉手垫粒	Handle pad	2	PF
12	门钩	Door hook	1	SGCC
11	弹簧	Spring	1	Manganese steel锰钢
10	玻璃减震胶	Aseismatic glue	2	Rubber
9	面板	Panel	1	SPCD
8	门钩支架	Door axis stents	1	SPCC
7	滑轮	Rotating Wheels	1	PA
6	滑轮轴套	Pulley axis cover	1	A3
5	左侧板	Left Side Plate	1	SGCC
4	发热管	Heating Element	4	SUS
3	顶板	Upper inner plate	1	SGCC
2	顶码	Top supporting frame	1	SGCC
1	外壳	Main Enclosure	1	SPCC
编号 NO	零件名称	Part Name	数量 QTY	Material Specifications

CODE(编码	DESCRIPTION:	BY:	DATE:
GUANGDONG KERONG ELECTRICAL APPLIANCES CO.,LTD.			
MODEL(型号):	KR-67-42B1C	PART.NO(产品编号):	
TITLE(名称):	Exploded	DWG.NO(图号):	REV(版次): A
MAT'L(材质):		PREPARED BY(制图):	DATE(日期):
QTY(用量):	1	CHECKED BY(校对):	DATE(日期):
	SCALE(比例):	STANDARD BY(标准):	DATE(日期):
	SHEET(页次): 1 OF 1	REVIEWED BY(审核):	DATE(日期):
	UNITS(单位): mm	APPROVED BY(核准):	DATE(日期):
	FRAME(图版): A3		

Form No. 01-165-C

由 Autodesk 教育版产品制作