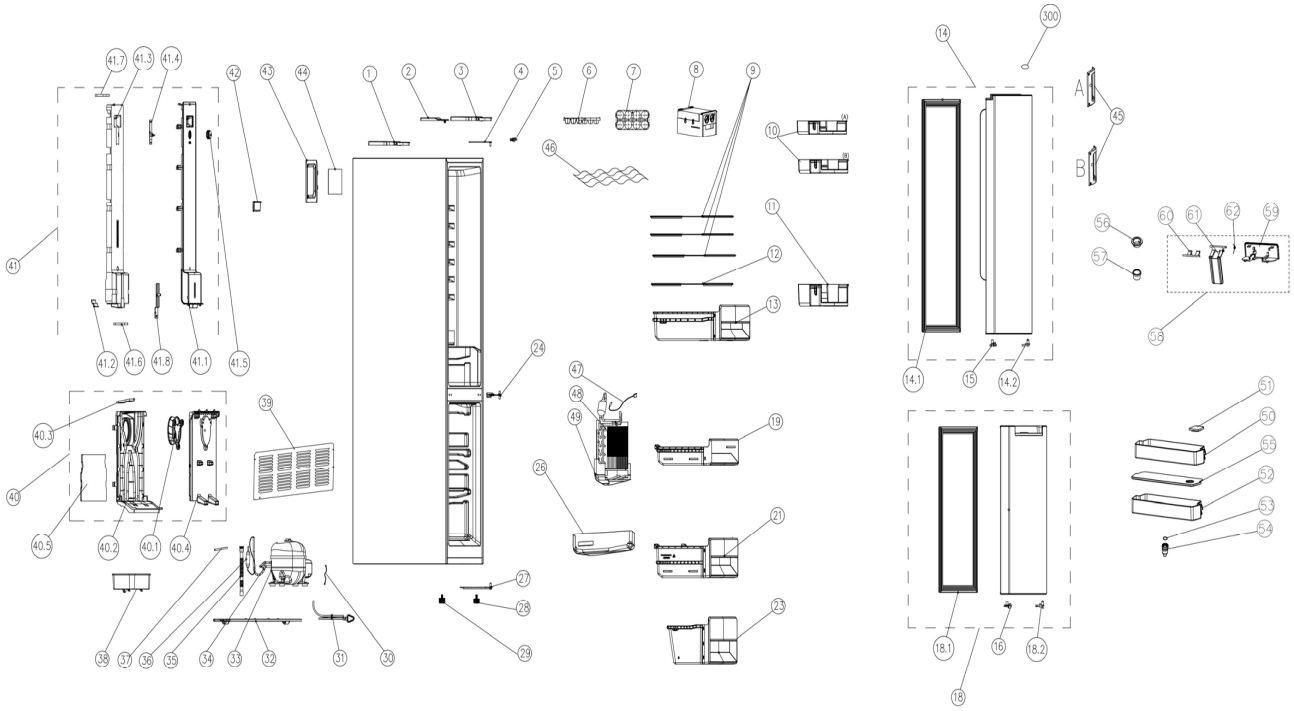
41.7
41.3
41.4
42
43
44
1
2
3
4
5
6
7
8
9
10
A
B
46
11
12
13
41
41.2
41.6
41.8
41.1
41.5
24
47
48
49
19
39
40.3
40
26
21
40.5
40.2
40.1
40.4
27
28
23
29
38
37
36
35
34
33
32
31
30
14
300
A
45
B
56
60
61
62
59
57
58
14.1
15
14.2
51
50
55
52
53
54
18.1
16
18.2
18