Exploded view
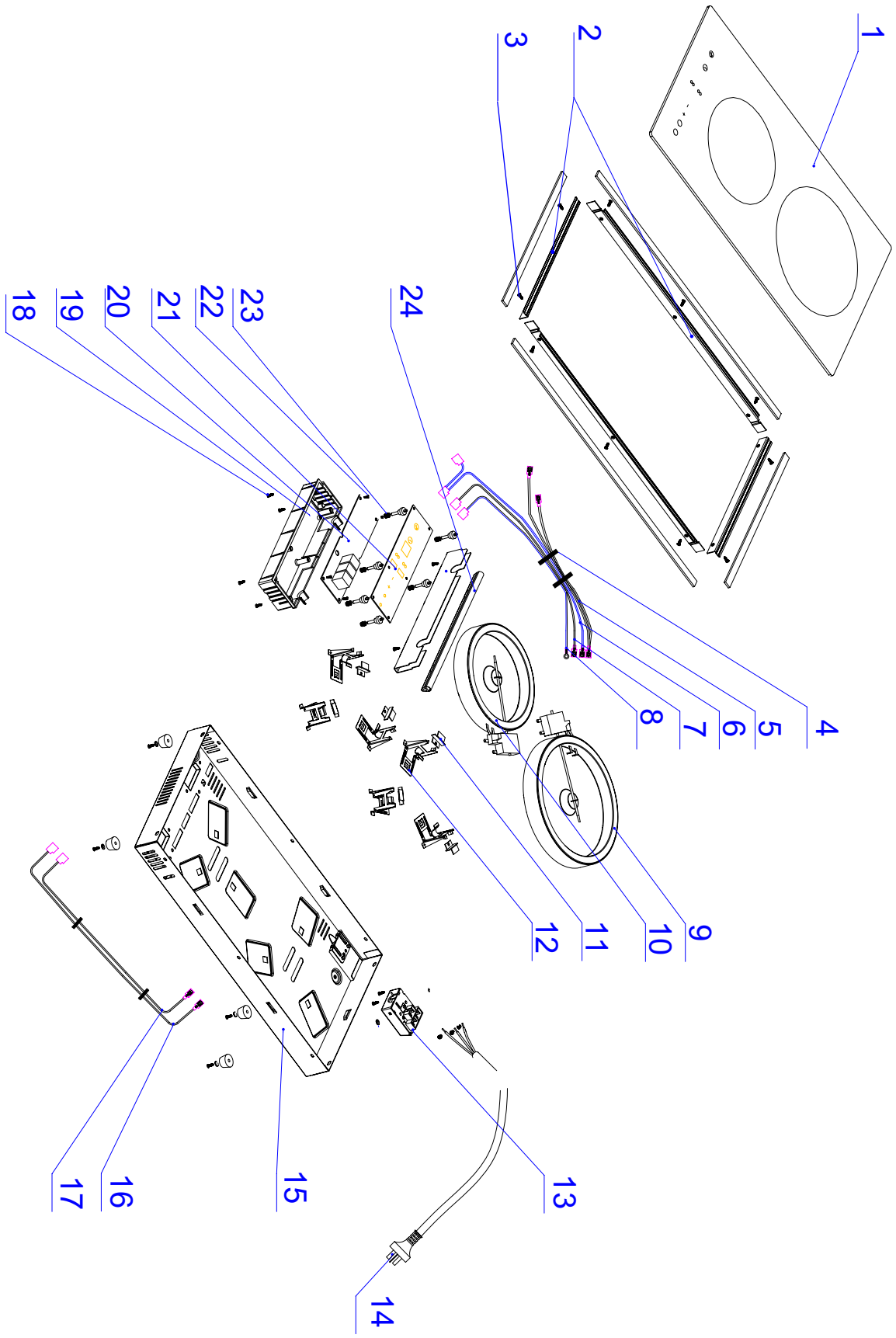
Model: HD301